GKV-125

FULL PORT TWO-PIECE BALL VALVE SCREWED END

- ISO 5211 DIRECT MOUNTING PAD
- BLOW-OUT PROOF STEM
- WORKING PRESSURE(CWP) :DN8~DN50 1000psi
- TEMPERATURE RANGE: -20 to 180℃
- LOCKING DEVICE
- PIPE THREAD IN ACCORDANCE
  - ANSI B1.20.1(NPT)
  - DIN 259/DIN 2999
  - ISO 228
  - BSP
  - PT

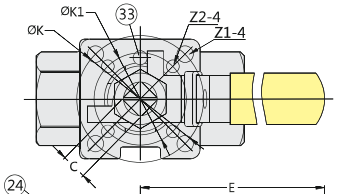

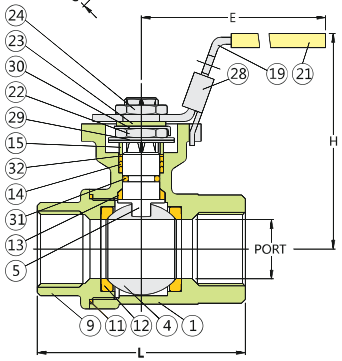

MATERIAL LIST

NO.	PART NAME	MATERIAL
1	BODY	ASTM A351 Gr.CF8M
4	BALL	ASTM A351 Gr.CF8M
5	STEM	SS316
9	END CAP	ASTM A351 Gr.CF8M
11	BODY SEAL	PTFE.
12	SEAT	PTFE.
13	THRUST WASHER	PTFE.
14	STEM PACKING	PTFE.
15	GLAND BUSH	SS304
19	HANDLE	SS304
21	HANDLE COVER	PLASTIC
22	STEM NUT	SS304
23	HANDLE WAHSER	SS304
24	HANDLE NUT	SS304
28	LOCKING DEVICE	SS304(OPTION)
29	BELLEVILLE WASHER	SUS304-CSP
30	TAB WASHER	SS304
31	STEM O-RING	VITON
32	PACKING FOLLOWER	PTFE.+25GGF
33	STOP PIN	SS304

DIMENSIONS

unit:mm

SIZE		PORT	L	E	H	C	ØK	ØK1	Z1-4	Z2-4
DN8	1/4"	11.5	65.3	112.0	72.9	9.0	50.0	36.0	7.0	6.0
DN10	3/8"	12.5	65.3	112.0	72.9	9.0	50.0	36.0	7.0	6.0
DN15	1/2"	15.0	65.3	112.0	72.9	9.0	50.0	36.0	7.0	6.0
DN20	3/4"	20.0	77.3	112.0	81.8	9.0	50.0	36.0	7.0	6.0
DN25	1"	25.0	88.7	136.0	90.5	9.0	50.0	36.0	7.0	6.0
DN32	1-1/4"	32.0	102.4	185.0	98.0	9.0	50.0	36.0	7.0	6.0
DN40	1-1/2"	38.0	109.0	197.9	114.7	14.0	70.0	50.0	9.0	7.0
DN50	2"	50.0	125.3	197.9	124.0	14.0	70.0	50.0	9.0	7.0

GKV-125L

FULL PORE TWO-PIECE BALL VALVE SCREWED END

- BLOW-OUT PROOF STEM
- WORKING PRESSURE(CWP):DN8~DN50 1000psi
  DN65~DN80 800psi
- TEMPERATURE RANGE: -20 to 180℃
- LOCKING DEVICE
- FACE TO FACE: DIN 3202 M3
- PIPE THREAD IN ACCORDANCE
  - ANSI B1.20.1(NPT)
  - DIN 259/DIN 2999
  - ISO 228
  - BSP
  - PT

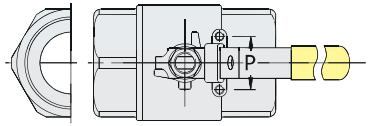

MATERIAL LIST

NO.	PART NAME	MATERIAL
1	BODY	ASTM A351 Gr.CF8M
4	BALL	ASTM A351 Gr.CF8M
5	STEM	SS316
9	END CAP	ASTM A351 Gr.CF8M
11	BODY SEAL	PTFE.
12	SEAT	RTFE.
13	THRUST WASHER	PTFE.
14	STEM PACKING	PTFE.
16	GLAND NUT	SS304
19	HANDLE	SS304
21	HANDLE COVER	PLASTIC
24	HANDLE NUT	SS304
27	HANDLE WASHER	SS304
28	LOCKING DEVICE	SS304(OPTION)

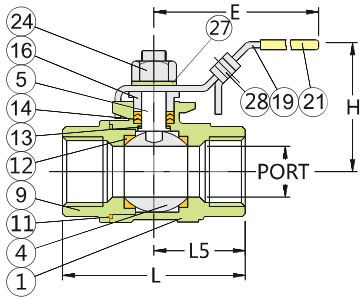

DIMENSIONS

unit:mm

SIZE		PORT	L(M3)	L	L5	E	H	P
DN8	1/4"	11.5	60.0	54.4	28.2	97.4	50.0	28.5
DN10	3/8"	12.5	60.0	54.4	28.2	97.4	50.0	28.5
DN15	1/2"	15.0	75.0	65.3	35.7	123.0	58.8	28.5
DN20	3/4"	20.0	80.0	77.3	40.2	123.0	62.5	35.0
DN25	1"	25.0	90.0	88.7	45.0	145.0	69.3	35.0
DN32	1-1/4"	32.0	110.0	102.4	53.4	145.0	76.0	38.0
DN40	1-1/2"	38.0	120.0	109.0	60.0	189.0	86.9	38.0
DN50	2"	50.0	140.0	125.3	69.5	189.0	95.0	38.0
DN65	2-1/2"	65.0	185.0	165	91.5	255.0	131.3	55.0
DN80	3"	80.0	205.0	189.5	102.7	261.0	140.6	55.0