GKV-143L

3-WAY [L-PORT&T-PORT]BALL VALVE SCREWED END

- BLOW-OUT PROOF STEM
- WORKING PRESSURE(CWP) :DN 8~DN50 1000psi PN63 bar
- TEMPERATURE RANGE: -20 to 180℃
- LOCKING DEVICE
- THERE ARE FOUR SEATS
- L-PORT OR T-PORT AVAILABLE 360°POTARY HANDLEE
- PIPE THREAD IN ACCORDANCE
  ANSI B1.20.1(NPT)
  DIN 259/DIN 2999
  ISO 228
  BSPT(PT)
  BSP(PF)

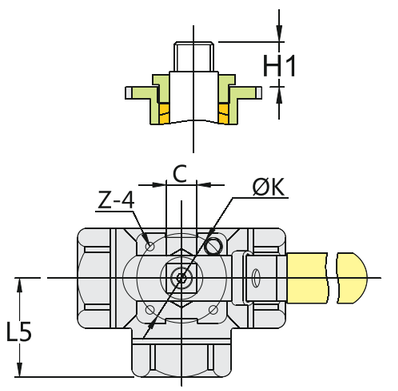

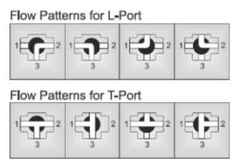

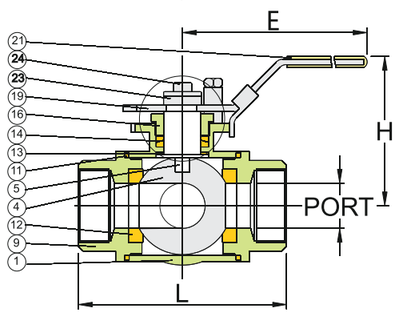

MATERIAL LIST

NO.	PART NAME	MATERIAL
1	BODY	ASTM A351 Gr.CF8M
4	BALL	ASTM A351 Gr.CF8M
5	STEM	SS316
9	END CAP	ASTM A351 Gr.CF8M
11	BODY SEAL	PTFE.
12	SEAT	PTFE.
13	THRUST WASHER	PTFE.
14	STEM PACKING	PTFE.
16	GLAND NUT	SS304
19	HANDLE	SS304
21	HANDLE COVER	VINYL GRIP
23	HANDLE WASHER	SS304
24	HANDLE NUT	SS304
28	LOCKING PAD	SS304

DIMENSIONS

unit:mm

SIZE		PORT	L	L5	E	H	H1	C	ØK	Z-4
DN8	1/4"	11.0	69.4	34.6	133.4	60.7	10.7	9.0	42.0	M5xP0.8
DN10	3/8"	11.0	69.4	34.6	133.4	60.7	10.7	9.0	42.0	M5xP0.8
DN15	1/2"	12.5	75.7	37.3	133.4	64.1	10.7	9.0	42.0	M5xP0.8
DN20	3/4"	16.0	86.6	44.7	178.5	82.4	13.9	11.0	50.0	M6xP1.0
DN25	1"	20.0	102.4	51.4	178.5	86.1	20.0	11.0	50.0	M6xP1.0
DN32	1-1/4"	25.0	118.2	57.7	209.9	91.4	23.8	11.0	50.0	M6xP1.0
DN40	1-1/2"	32.0	125.8	62.7	208.0	102.7	25.8	11.0	70.0	M8xP1.25
DN50	2"	38.0	149.0	74.6	229.9	110.7	25.3	14.0	70.0	M8xP1.25
DN65	2-1/2"	50.0	160.0	80.0	229.9	115.8	24.5	14.0	70.0	M8xP1.25
DN80	3"	65.0	185.0	92.5	265.0	132.0	25.5	17.0	102.0	M10xP1.5

GKV-144

3-WAY/4-WAY BALL VALVE SCREWED END

- BLOW-OUT PROOF STEM
- ISO 5211 DIRECT MOUNTING PAD
- WORKING PRESSURE(CWP) :DN8~DN100 1000psi
  PN63bar
- TEMPERATURE RANGE: -20 to 180℃
- LOCKING DEVICE
- THERE ARE FOUR SEATS
- L-PORT OR T-PORT OR X-PORT AVAILABLE 360°POTARY

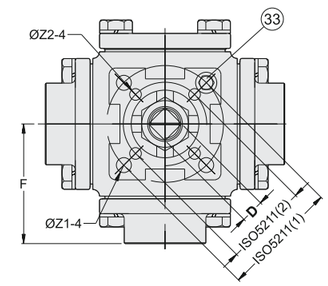

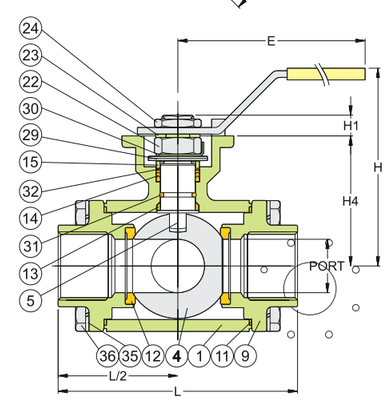

MATERIALS LIST

NO.	PART NAME	MATERIAL	Q'TY
1	BODY	ASTM A351 Gr.CF8M	1
4	BALL	ASTM A351 Gr.CF8M	1
5	STEM	SS316	1
9	END CAP	ASTM A351 Gr.CF8M	4
11	BODY SEAL	PTFE.	4
12	SEAT	PTFE.	4
13	THRUST WASHER	PTFE.	1
14	STEM PACKING	PTFE.	1SET
15	GLAND	SS304	1
19	HANDLE	SS304	1
21	HANDLE COVER	PLASTIC	1
22	STEM NUT	SS304	1
23	HANDLE WASHER	SS304	1
24	HANDLE NUT	SS304	1
29	BELLEVILLE WASHER	SS410	2
30	STOP WASHER	SS304	1
31	O-RING	VITON	1
32	PACKING FOLLOWER	PTFE.+25GF	1
33	STOP PIN	SS304	1SET
35	BOLT	SS304	16
36	BOLT WASHER	SS304	16

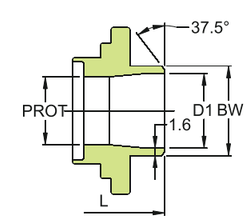

Butt weld end

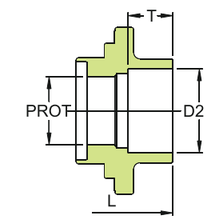

Socket weld end

DIMENSIONS

unit:mm

SIZE	PORT	L	E	H1	H	H4	D	Z1	Z2	F	ISO 5211		BW	D1	D2	T
1/2"	16.0	96.0	186.5	9.0	89.0	47.8	9.0	6.0		48.0		42 F04	21.3	15.8	21.8	10.0
3/4"	20.0	107.0	218.0	11.0	98.0	58.2	11	7.0		53.5		50 F05	26.7	20.9	27.4	13.0
1"	25.0	126.0	218.0	11.5	102.0	64.0	11	7.0		63.0		50 F05	33.4	26.6	34.1	13.0
1-1/4"	32.0	133.0	235.0	15.2	118.5	79.0	14.0	9.0	7.0	66.5	50 F05	70 F07	42.2	35.1	42.7	13.0
1-1/2"	38.0	151.0	235.0	14.3	127.0	88.5	14.0	9.0	7.0	75.5	50 F05	70 F07	48.3	40.9	49.0	13.0
2"	50.0	166.0	252.0	17.8	139.0	105.8	17.0	11.0	9.0	83.0	70 F07	102 F10	60.3	52.5	61.0	16.0
2-1/2"	65.0	175.0	302.0	17.5	165.7	117.3	17.0	11.0	9.0	87.5	70 F07	102 F10	73.0	62.7	77.0	16.0
3"	80.0	207.2	302.0	17.5	170.0	128.0	17.0	11.0	9.0	103.6	70 F07	102 F10	88.9	77.9	90.2	16.0
4"	100	285.6	600.0	30.0	308.0	159.0	27.0	14.0		142.8		125 F12	114.3	102.3	115.3	22.0